Operation Manual

BIBD-205

BOD Incubator

Thank you for Choosing Biolab products. Please read the “Operating Instructions” and “Warranty” before operating this unit to assure proper operation.

Index

01 Summary

BOD incubator is a highion constant temperature incubator with heating and cooling control. It is applicable for the plant cultivating, testing of seed breeding, cultivating and storing the bacteria, mould, microorganism, analyzing water and BOD measuration. It is applicable in biologic descendibility project, medical college, sanitation epidemic prevention, medicine testing, farming and fisheries institutes for research.

02 Principle of Operation

Biochemical incubator transforms the actual temperature felt by temperature sensor in chamber to electrical signal, and control the work of heater and compressor by microcomputer to reach the required temperature.

03 Technical Parameter

1. Volume: 800L;
2. Temp. range: 0~65℃;
3. Temp. floctuation: ±0.5℃(10℃ ~ 40℃);
4. Temp. uniformity: ±1℃(10℃ ~ 40℃);
5. Power supply: AC220V/50Hz;
6. Power consumption: 2200W;
7. Work ambient: Ambient temp.: 10~30℃; Relative humidity≤70%RH;
8. Refrigerant: R134;
9. Equipment class: Class I.

Notes: The product has low-temperature auto-defrosting function, and it’s normal that the temperature will has some fluctuations when auto-defrosting.

04 Structure

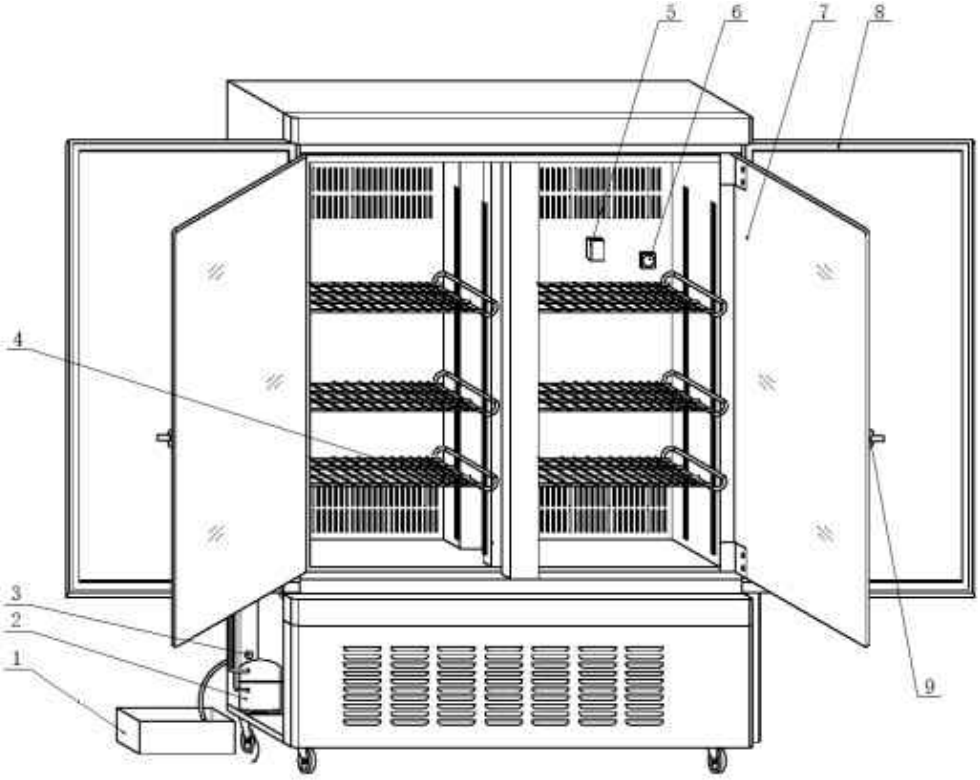

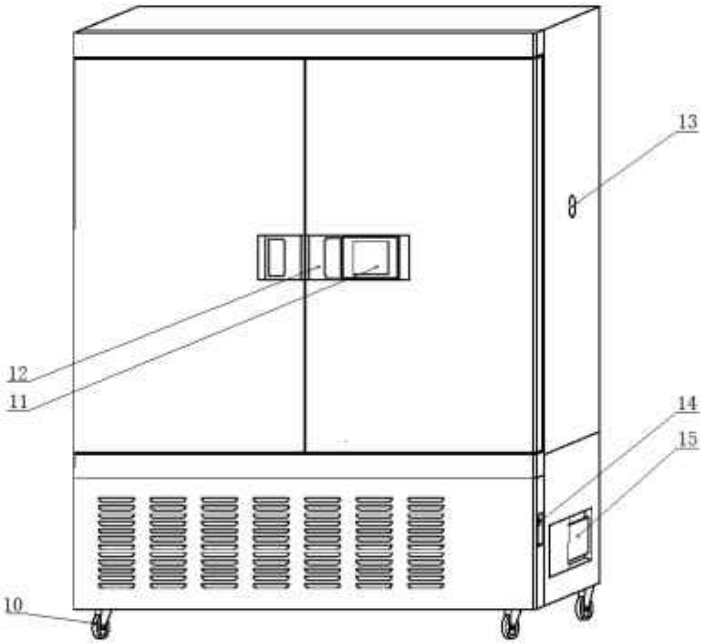

1. Drain pan
2. Compressor Unit
3. Overfall Gap
4. Shelves
5. Temperature Sensor
6. Socket
7. Glass Iner Door
8. Out door Magnetic Seal
9. Inner Door Knob
10. Truckless
11. LCD Screen
12. Outer Door Handle
13. Inspection Port
14. Power Switch RS-485 interface
15. Electrical Box

05 Control Panel

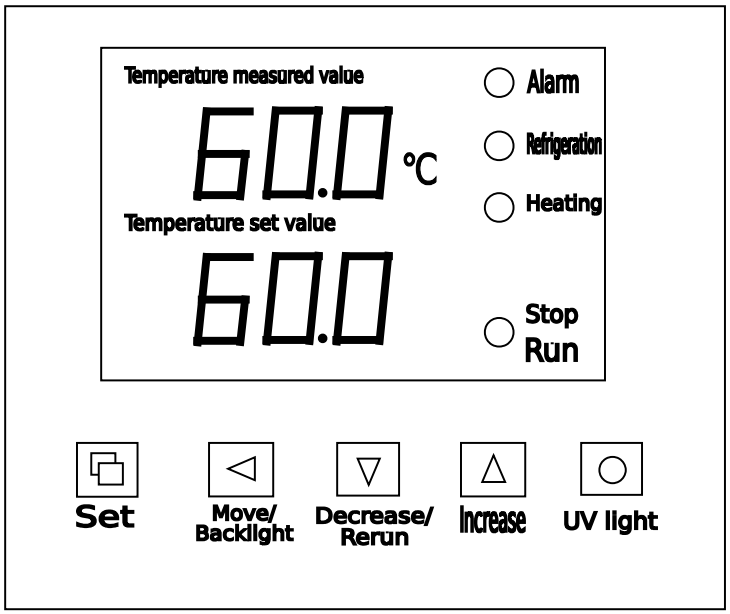

Definition of keys:
1) Press any key for silencing when beeps;
2) Move key: control the backlight if not in set state;
3) Decrease key: keep the key pressed for 4sec to rerun when running ends;

4) Sterilization key: control the UV light.
5) Set key: enter the set state.

Where to Installation

- No direct sunlight
- Well ventilated
- Keep away from heat
- Solid and smooth ground
- No high humidity
- No flammable or corrosive gases

06 Installation

- Remove the packing, open the door for ventilation. If necessary, clean the outer case and panel with neutral detergent, then clean with water and wipe with dry cloth.
- Fix with the two front truckles after place the product.
- Use the power socket with a grounding wire.
- Close the door and ensure the chamber dry before lay aside the product.
- Empty the humidifying disc before move the product.

07 Preparation before operation

- Take the shelves and other accessories out.
- Disinfect the chamber with alcoholic gauze, then clean with dry gauze.
- Place the shelves in chamber.
- Insert the overflow pipe into overfall gap, and place the drain pan under the outlet.(Reference to Structure diagram)

Notes: don’t clean the product with NaCl solvent or other halide solution.

08 Method of operation

- Set state

1) Press Set key to set temperature, press Move, Increase and Decrease keys to set the temperature value.

2) Press Set key again to set time, press Move, Increase and Decrease keys to set the timing time value. (00:00 indicates the product will work continuously)

3) Long press Set key to back to display state.

- Inner parameters state

Long press Set key for 3sec, if code is 3:

Symbol	Parameter name	Functional description	Initial value
Lc-	Code	When Lc=3, parameter value can be seen and amended	
P--	Ratio	Adjust time ratio effect	(3.0 ~ 30.0) 15.0
AL-	Over-temp. alarm	When PV>=SP+AL, the buzzer beeps with refrigeration	(0.0 ~ 20.0) 3.0℃
cT-	Compressor delay	Compressor delay protect time, , twice start time >=cT min 。	(0.0 ~ 10.0) 3
uP-		If 40.0℃ < temperature set value < 48.0℃ , When temperature measured value≥temperature set value+UP , start the compressor; when temperature measured value≤temperature set value +UP-2, close the compressor	(0.2 ~ 2.0) 0.9
Pb-	Zero position adjustment	Amend the error brought by sensor Pb=actual temp. value – measured temp. value	(-9.9~9.9) 0.0
PK-	Full scale adjustment	When actual temp. error appears, adjust PK=1000*(actual temp. value – measured temp. value)/ measured temp. value	(-999 ~ 999) 0

If code is 9, amend the address

Symbol	Parameter name	Functional description	Initial value
Lc-	Code	When Lc=9, parameter value can be seen and amended	
Adr-	Address	Address of the equipment	（1～32） 1

If code is 23, amend the defrosting interval time and the time compressor stops

Symbol	Functional description	Initial value
Lc-	When Lc=23, parameter value can be seen and amended	
CP	When set temp.≤CP, the compressor will work continuously	35.0
Ft	Fan turn on delay time after defrosting	30
dt1	Defrosting interval time when set temp.≤5.0℃	(0～200h) 12h
HS1-	Time from defrosting to compressor stops when set temp.≤5.0℃	(0～600sec) 180 sec
dt2	Defrosting interval time when 5.0℃＜set temp.≤10.0℃	(0～200 h) 24 h
HS2-	Time from defrosting to compressor stops when 5.0℃＜set temp.≤10.0℃	(0～600 sec) 180 sec
dt3	Defrosting interval time when 10.0℃＜set temp.≤15.0℃	(0～200 h) 72 h
HS3-	Time from defrosting to compressor stops when 10.0℃＜set temp.≤15.0℃	(0～600 sec) 180 sec
dt4	Defrosting interval time when 15.0℃＜set temp.≤20.0℃	(0～200 h) 72 h
HS4	Time from defrosting to compressor stops when 15.0℃＜set temp.≤20.0℃	(0～600 sec) 180 sec

09 Alarm and Safety Function

• Temperature sensor fault alarm: it displays O O O O and stops work with beeps.

• Temperature upper limit alarm: measured temperature exceed set temperature for 4℃, it stops heating with beeps.

10 Daily Use and Maintenance

• When convey incubator, keep upright or horizontal less than 45 degrees.

• Don’t change the setting value continually in use to avoid over loading occurred by continual startup of compressor and affect the use life of the equipment.

• The equipment is installed two groups of fuse. If malfunction occurs when running, please cut off the power first and check the fuse, then check other parts.

• Don’t wipe the outer with corrosive solution to keep the equipment clean. Wipe the inner with dry cloth ot alcohol to keep the inner clean.

• Keep the inner chamber dry and cut off the power when the equipment is not in use.

• Check frequently whether the screw type ventilator inner is in normal operation to ensure the temperature uniformity inner. Don’t place items too closely in chamber and block the uptake of fan when testing to make for air circulation in chamber.

Auxiliary Connection

RS-232/RS-485 converter

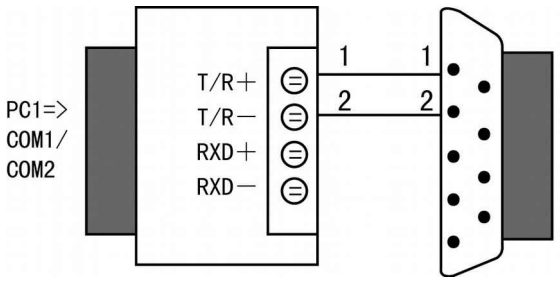

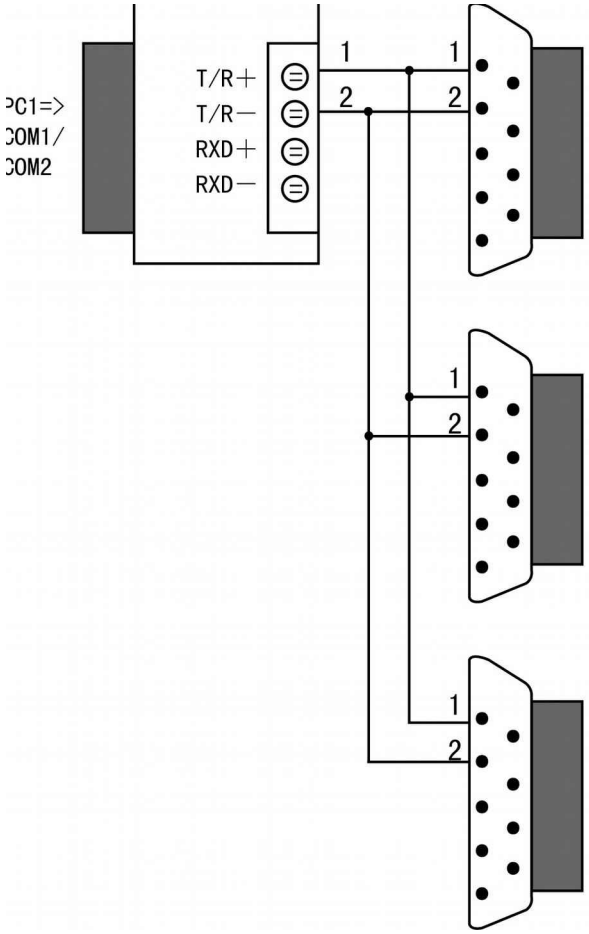

Troubleshooting

Fault	Check / Troubleshooting
Sensor failure alarm	·Check temp. sensor, model PT100
Temperature can’t reach set value	·Check heater, power: 800W*4
No display	·Check fuses ·Check power switch ·Check whether there is 220V

11 Configfuration Table

Model	BIBD-205
Outside dimensions	1503×896×1838
Inside dimension	1220×585×1123
Available capacity	800L
Outer case	high-quality cold-rolled steel plate matt spray coating
Inner shell	SUS304
Outer door	original composite door design
Inner door	5mm toughened glass
Shelves	chrome-plated steel, adjustable
Thermal insulation system	polystyrene foam
Refrigeration system	non-CFC refrigerant, integrated refrigeration system, multiple protection
Heating system	heating element
Fan	EBM electric motor
Temperature sensor	PT100
Display screen	LCD
Alarm system	temperature upper limit alarm, sensor failure alarm
Weight	385kg
Optional	printer

12 Packing List

No.	Name	Quantity	Remarks
1	Instruction manual	1 pc	
2	Certificate of approval	1 pc	
3	Quality warranty card	1 pc	
4	Shelf	6 pcs	
5	Bracket	24 pcs	
6	Drain pan	1 pc	
7	Pipe	1 pc	φ10

Email: contact@biolabscientific.com
Website: www.biolabscientific.com